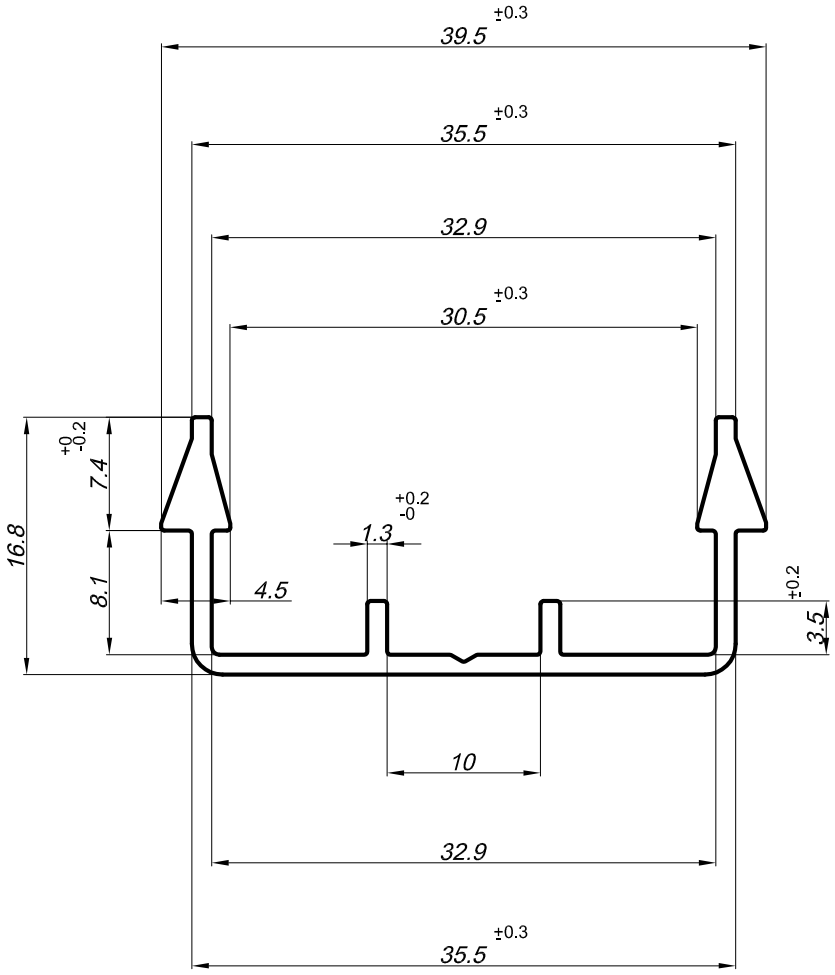

REV. B 11.07.16	E: 2:1	POL- JC	DIN-A4	DISEÑO: 5491 CÓDIGO ISO: EN-R-0.5 (V01)	TÜVRheinland CERTIFIED Management System ISO 9001:2008 www.tuv.com ID 9105023544

POLYCARBONATE COVER PROFILE

POLINTER
PERFILES PLÁSTICOS